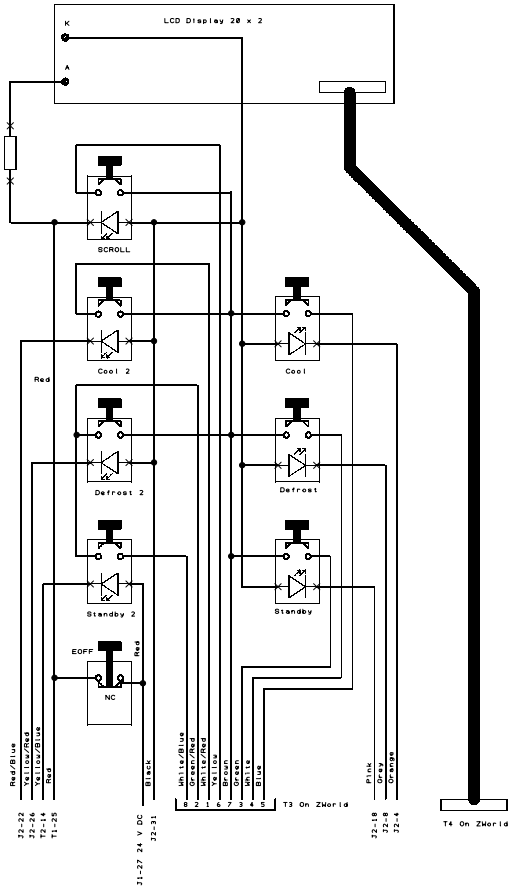

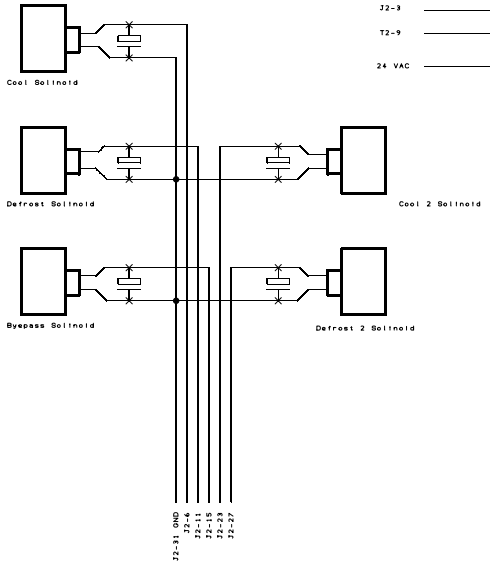

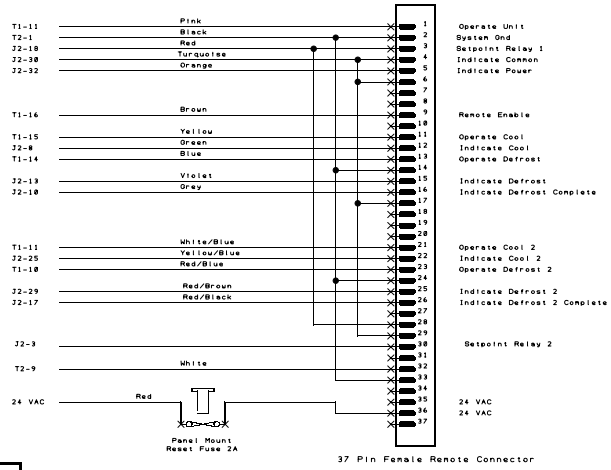

						1/5/02		Front Panel/Remote/Valve Box Wiring Diagram
							Telemark Cryogenics Limited	DWG PB200204-2 REV3

03L1
A3

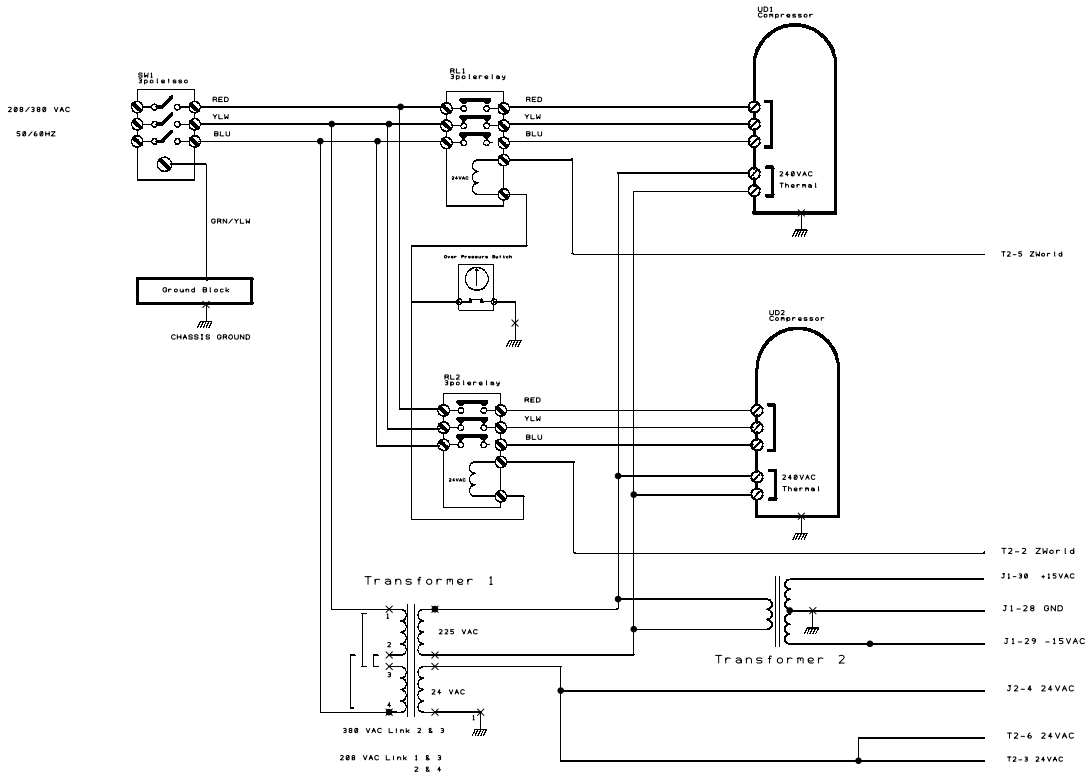

								CHASSIS WIRING DIAGRAM
							Telemark Cryogenics Ltd	DWG PB200204-3

OTL1
A3